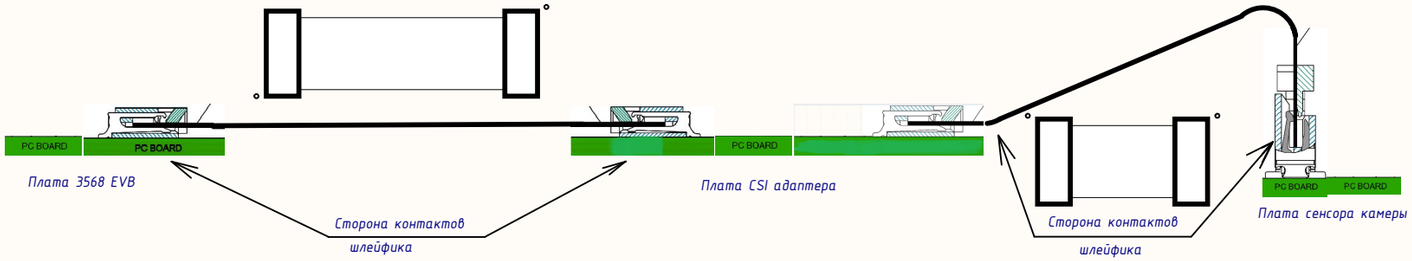

I2C LEVEL TR

MATCHING CONNECTOR
FOR DS-RK3568-EVB CONNECTION

X1

	TAB	GND
SDA_1V8	1	SDA_1V8
SCL_1V8	2	SCL_1V8
PWDN0_1V8	3	PWDN0_1V8
RESET0_1V8	4	RESET0_1V8
GND	5	GND
CLK0_1V8	6	CLK0_1V8
PWDNN1_1V8	7	PWDN1_1V8
RESET1_1V8	8	RESET1_1V8
CLK1_1V8	9	CLK1_1V8
GND	10	GND
MIPI_RX_D0_P	11	MIPI_RX_D0_P
MIPI_RX_D0_N	12	MIPI_RX_D0_N
GND	13	GND
MIPI_RX_D1_P	14	MIPI_RX_D1_P
MIPI_RX_D1_N	15	MIPI_RX_D1_N
GND	16	GND
MIPI_RX_CLK0_P	17	MIPI_RX_CLK0_P
MIPI_RX_CLK0_N	18	MIPI_RX_CLK0_N
GND	19	GND
MIPI_RX_D2_P	20	MIPI_RX_D2_P
MIPI_RX_D2_N	21	MIPI_RX_D2_N
GND	22	GND
MIPI_RX_D3_P	23	MIPI_RX_D3_P
MIPI_RX_D3_N	24	MIPI_RX_D3_N
GND	25	GND
MIPI_RX_CLK1_P	26	MIPI_RX_CLK1_P
MIPI_RX_CLK1_N	27	MIPI_RX_CLK1_N
GND	28	GND
5V_SYS	29	5V0
5V_SYS	30	
	TAB	GND

R10 2K2
R11 2K2
R17 2K2
R18 2K2
R19 2K2
R20 2K2

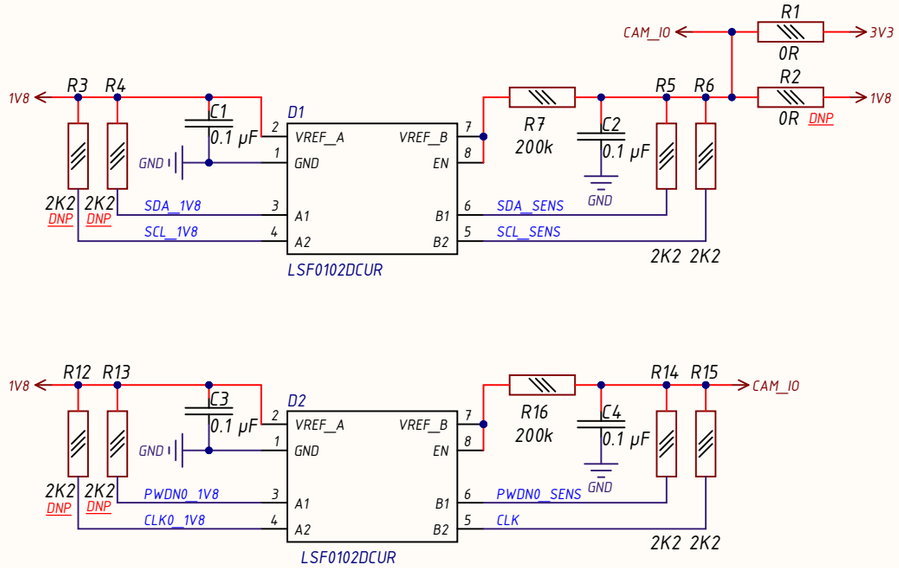

MATCHING CONNECTOR
FOR IMX678 SENSOR CONNECTION

X2

		GND	GND
		3V3	22 3V3 POWER
SDA_SENS	R9		21 I2C SDA
SCL_SENS	R8	0R	20 I2C SCL
CLK0_1V8	R21	0R	19 GND
CLK	R27	0R DNP	18 LED IND
PWDN0_SENS	R28	0R	17 PWR EN
		0R	16 GND
MIPI_RX_D3_P			15 MIPI_D3_P
MIPI_RX_D3_N			14 MIPI_D3_N
			13 GND
MIPI_RX_D2_P			12 MIPI_D2_P
MIPI_RX_D2_N			11 MIPI_D2_N
			10 GND
MIPI_RX_CLK0_P			9 MIPI_CLK_P
MIPI_RX_CLK0_N			8 MIPI_CLK_N
			7 GND
MIPI_RX_D1_P			6 MIPI_D1_P
MIPI_RX_D1_N			5 MIPI_D1_N
			4 GND
MIPI_RX_D0_P			3 MIPI_D0_P
MIPI_RX_D0_N			2 MIPI_D0_N
			1 GND
		GND	GND

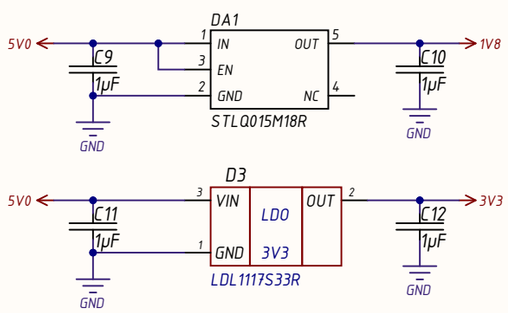

Title		
Size A3	Number	Revision 27.02.2024 Pinout checked
Date: 4.07.2025		Sheet of
File: F:\Work\...\ds-rk3568-evb-csi-3022Drawing.SchDoc		